Chaya Shiva - DCM 1.0

(Design might vary)

[1] Measuremen without Head!

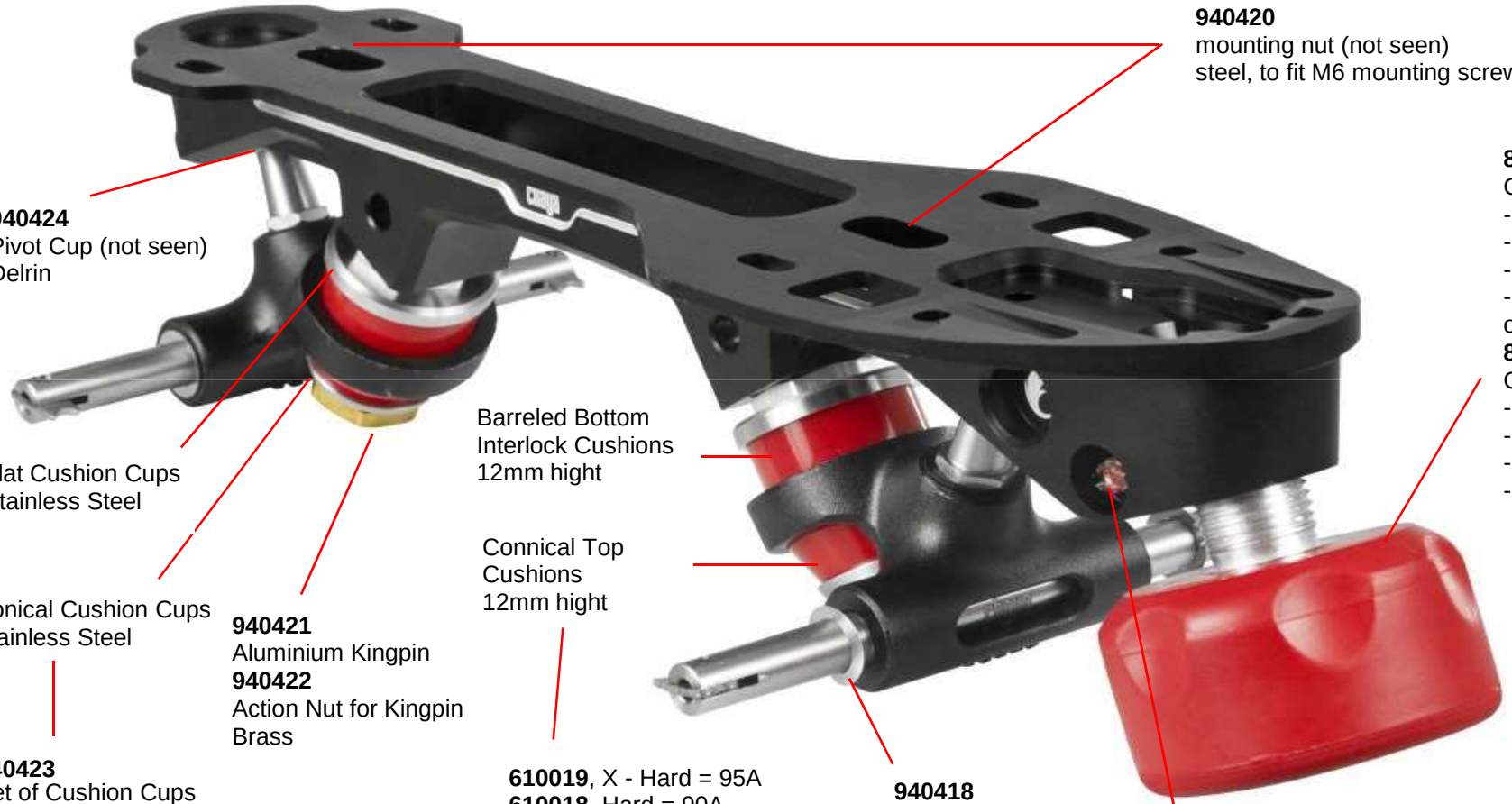

940420
mounting nut (not seen)
steel, to fit M6 mounting screws

940424
Pivot Cup (not seen)
Delrin

810531
Cherry Bomb Toe Stop
- round head
- short or long stem
- cherry red color
- other colors available

or

810505
Cherry Bomb Toe Stop
- flat head
- short or long stem
- cherry red color
- other colors available

Barreled Bottom
Interlock Cushions
12mm hight

Flat Cushion Cups
Stainless Steel

Connical Top
Cushions
12mm hight

Conical Cushion Cups
Stainless Steel

940421
Aluminium Kingpin

940422
Action Nut for Kingpin
Brass

940423
Set of Cushion Cups
(2 pcs. flat, 2 pcs.
conical)

610019, X - Hard = 95A
610018, Hard = 90A
610017, Medium = 85A
610016, Soft = 80A
Jelly Interlock Bushings
Set (2 pcs. barreled, 2 pcs.

940418
Wave washer
stainless steel

940419
Lock Screw for Toe Stop
5mm hex, M6, length 20mm[1]